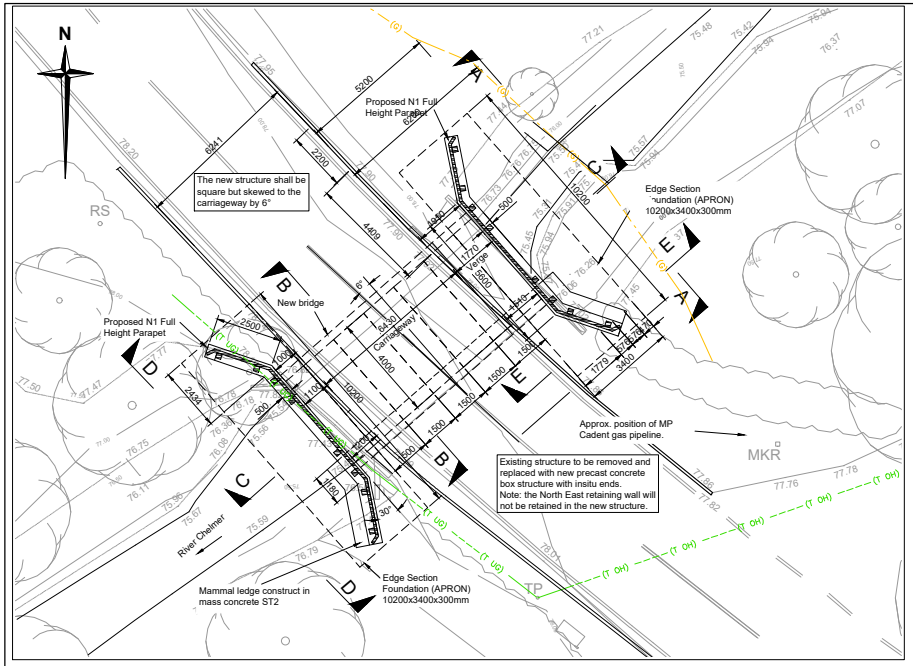


## PLAN

*Scale 1:100*

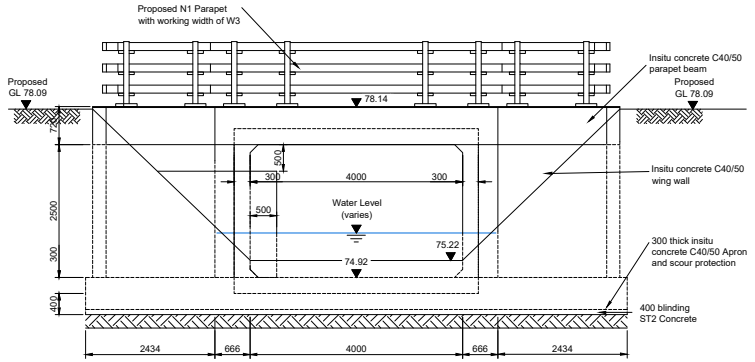


## SECTION A-A

*Scale 1:50*

**NOTES**

1. All dimensions are in millimetres unless noted otherwise.
2. All levels are in metres above Ordnance Datum unless noted otherwise.
3. This drawing is to be read in conjunction with all other drawings and the specification.
4. Stats shown are indicative only.
5. AC6 dense surf 100/150 to S.H.W. cl. 909 laid on bond coat to S.H.W. cl. 920 used to surface the Footways.
6. AC10 close surface course 100/150 and AC20 dense binder course 100/150 used to surface the carriageway

AC6 dense surf 100/150 to shw cl. 909 laid on bond coat to shw cl. 920 used for the Footways & Carriageway

AC14 close surf 100/150 to shw cl. 912

AC10 close surface course 100/150

AC20 dense binder course 100/150

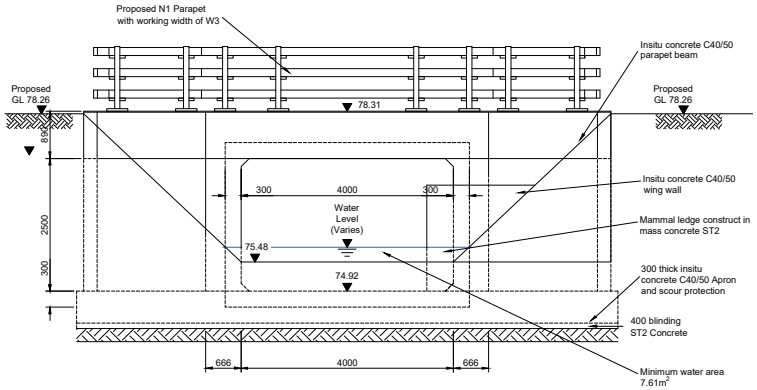


## SECTION D-D

*Scale 1:50*

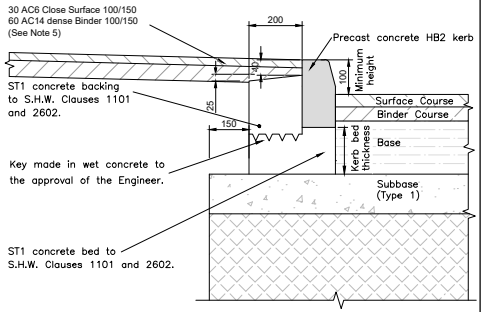


## NEW KERB DETAIL

*Scale 1:10*

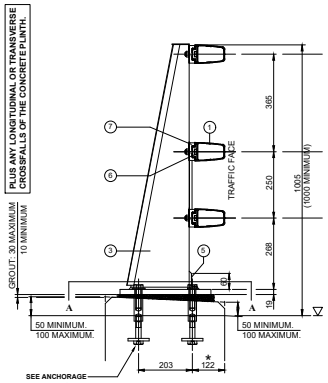


## SECTION THROUGH PARAPET

*Scale 1:100*

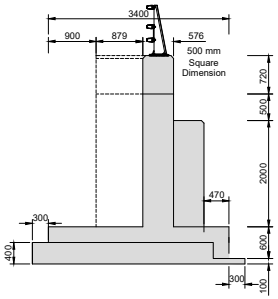


## SECTION E-E

*Scale 1:50*

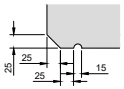


## DRIP DETAIL

Scale 1:5

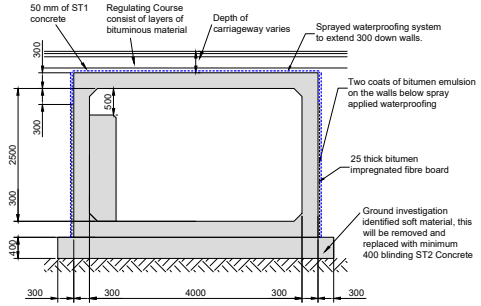


## SECTION B-B

*Scale 1:50*

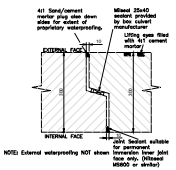


## TYPICAL JOINT SEALING DETAIL IN PRECAST UNITS

Scale 1:10

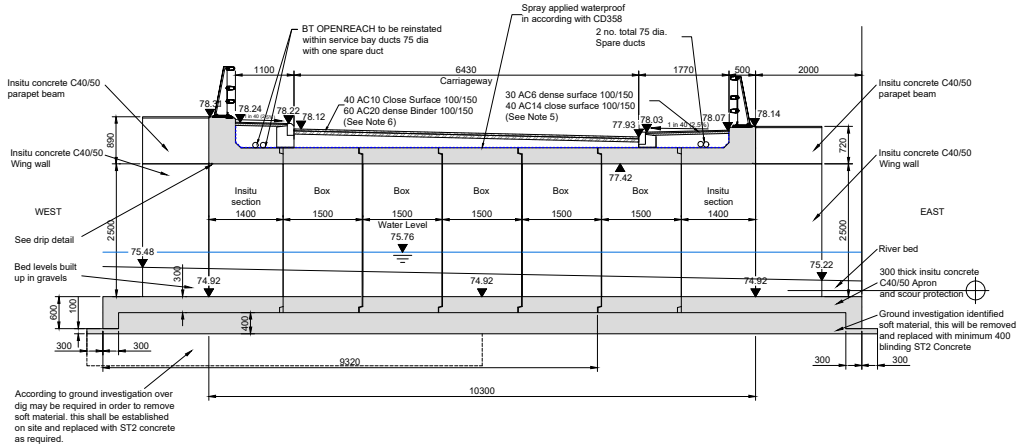


## SECTION C-C

*Scale 1:50*

| Rev | Date | Description of revision | Drawn | Checked | Review'd | Approv'd |
|---|---|---|---|---|---|---|
| | | | | | | |

DRAWING STATUS

**PRELIMINARY**

Essex Highways

Essex Highways
Seax House, 2nd Floor, Victoria Road South,
Chelmsford, CM1 1QH - Tel: 0345 6037631

© Essex County Council

SCHEME TITLE

**ARMITAGE BRIDGE**
**ECC BRIDGE No. 3063**

DRAWING TITLE

**PROPOSED GENERAL ARRANGEMENT**

| DESIGNED | DRAWN | CHECKED | REVIEWED | APPROVED |
|---|---|---|---|---|
| DATE | DATE | DATE | DATE | DATE |

DIMENSIONS IN MILLIMETRES
LEVELS IN METRES

As Shown

DRAWING No.

**BR3063-01-1201**

REV.

**B**

This map is reproduced from Ordnance Survey material with the permission of Ordnance Survey on behalf of the Controller of Her Majesty's Stationery Office © Crown Copyright. Unauthorised reproduction infringes Crown Copyright and may lead to prosecution or civil proceedings. Essex County Council, 100019602, 2021